6. Electric Pressure Gauge (dia. 52 mm)

Contents **Page**

Installation instructions

999-161-011: VDO cockpit vision
999-161-003: VDO cockpit international

See file ‘Installation Instructions (MA)’.

6. Electric Pressure Gauge (dia. 52 mm)

6.1 General Informations

The electric pressure gauge has been designed for land-bound vehicles or stationary systems only (exception: motorcycles).

The instrument has an analog pressure display graduated in bar or kPa.
Pressure sensors of the following types, adapted to the indicator pressure range, can be used:

negative earth,
insulated earth,
negative earth with warning contact.

The lamp socket is clipped in.
To replace the light bulb, carefully, with the thumb, push the lamp holder out to the side.

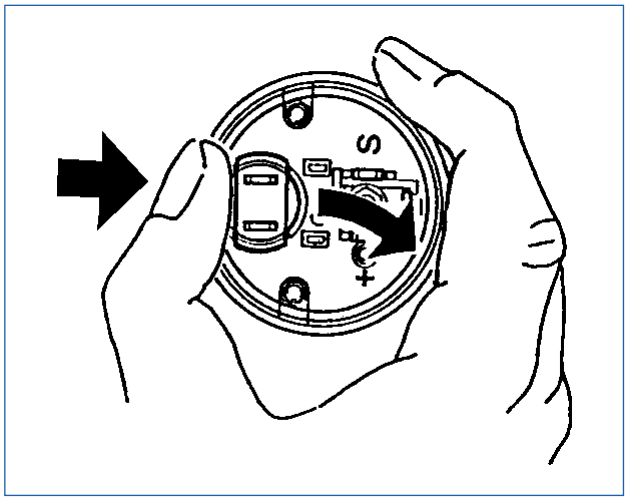

6. Electric Pressure Gauge (dia. 52 mm)

6.1 General Informations

Designation of functions
Movement: System Ke (90°)
(Turning magnet movement for ratio indication, maximum pointer travel 90°)

The pressure indicator applies the resisance measurement principle. A sensor converts the measured pressure to a corresponding resistance value. A turning magnet ratio measuring movement measures this resistance value. This value is displayed by a pointer moving over a dial graduated in pressure units. The turning magnet movement for ratio measurement comprises three stationary coils wound at 90° against each other, and a rotating permanent magnet disk in these coils. The coils are connected in a circuit for ratio measurement, so that the instrument is insensitive to on-board voltage fluctuations.

This maens that the pointer travel is only a function of the magnitude of the current flowing through the measuring system.

A magnetic shield prevents effects of external magnetic fields, indication errors due to temperature changes are corrected by a compensating resistor. A dropping resistor is used to adapt the measuring movement to higher operating voltages (e. g. 24V).

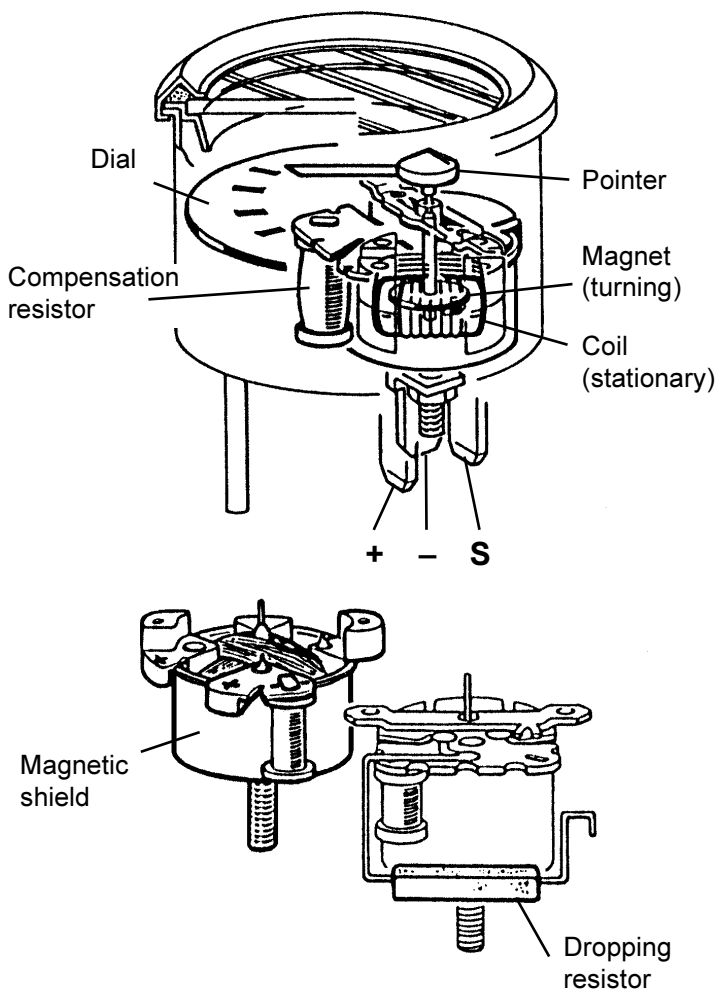

6. Electric Pressure Gauge (dia. 52 mm)

6.2 Technical Data

VDO cockpit vision

dia. 52 mm Backlight

Operating voltage:	11 ... 16 V or 21.5 ... 30 V
Movement:	System Ke (90°)
Current consumption:	82 mA (without illumination)
Operating temp.:	– 30°C ... + 85°C
Storage temperature:	– 40°C ... + 90°C
Illumination:	1 light bulb 14 V, 3.4 W or 24 V, 3 W, 2 colour caps (only at 12 V)
Protection:	IP64 DIN 40050 from the front reverse-polarity protection
Vibration resistance:	max. 1g eff., 25 ... 2000 Hz, duration 8h, f: 1 octave/min.
Nominal position:	NL 0 to NL 90, DIN 16257

Mounting hole: dia.53mm

Sensor:
pressure sensor (diaphragm), not included.

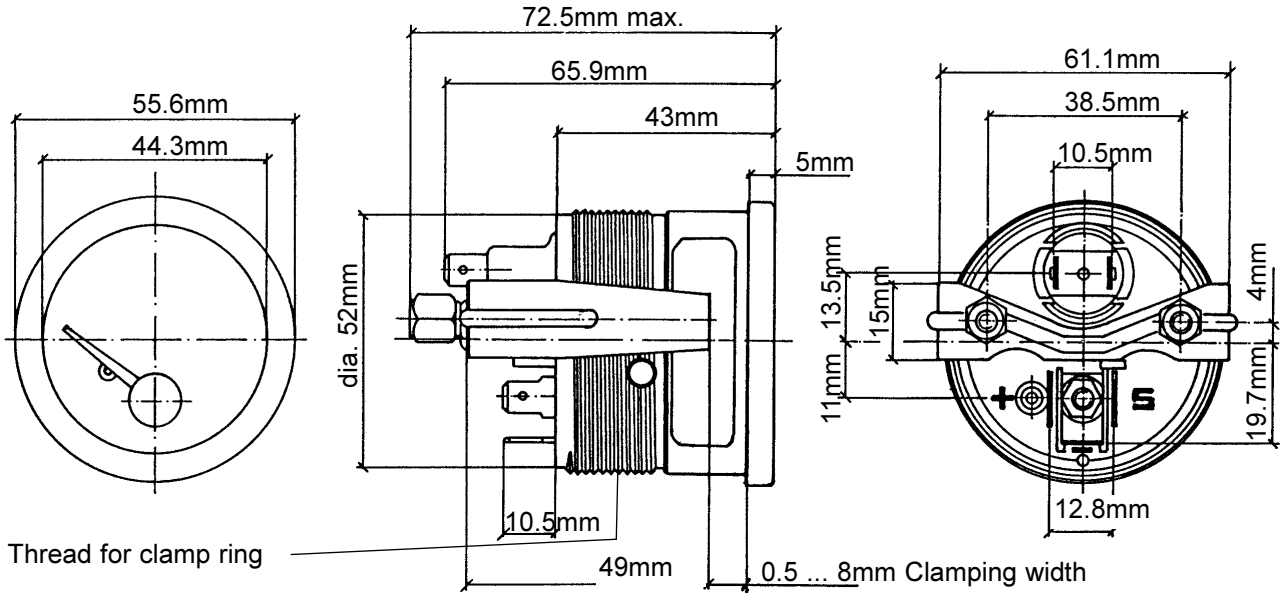

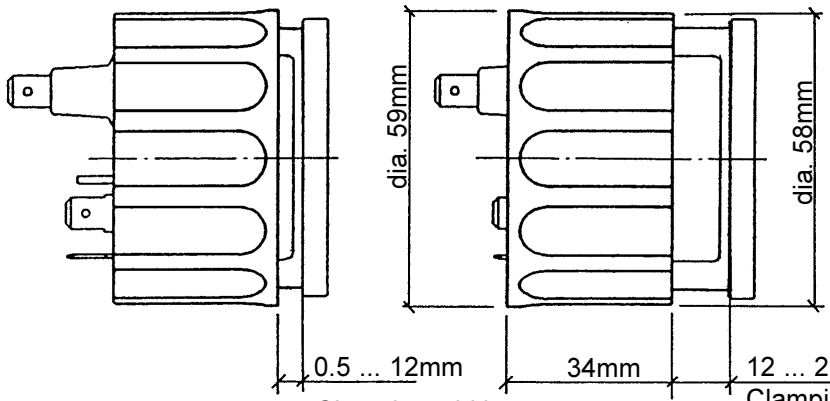

Pin assignment:

Pin +:	+ 12 V or + 24 V, terminal 15
Pin –:	Ground, terminal 31
Pin S:	Sensor

6. Electric Pressure Gauge (dia. 52 mm)

6.2 Technical Data

Operating voltage:	11 ... 16 V or 21.5 ... 30 V
Movement:	System Ke (90°)
Current consumption:	82 mA (without illumination)
Operating temp.:	– 30°C ... + 85°C
Storage temperature:	– 40°C ... + 90°C
Illumination:	1 light bulb 14 V, 3.4 W or 24 V, 3 W
Protection:	IP64 DIN40 050 from the front reverse-polarity protection
Vibration resistance:	max. 1g eff., 25 ... 2000 Hz, duration 8h, f: 1 octave/min.
Nominal position:	NL 0 to NL 90, DIN 16257

VDO cockpit international

dia. 52 mm Floodlight

Mounting hole: dia. 53mm

Sensor:
pressure sensor (diaphragm),
not included.

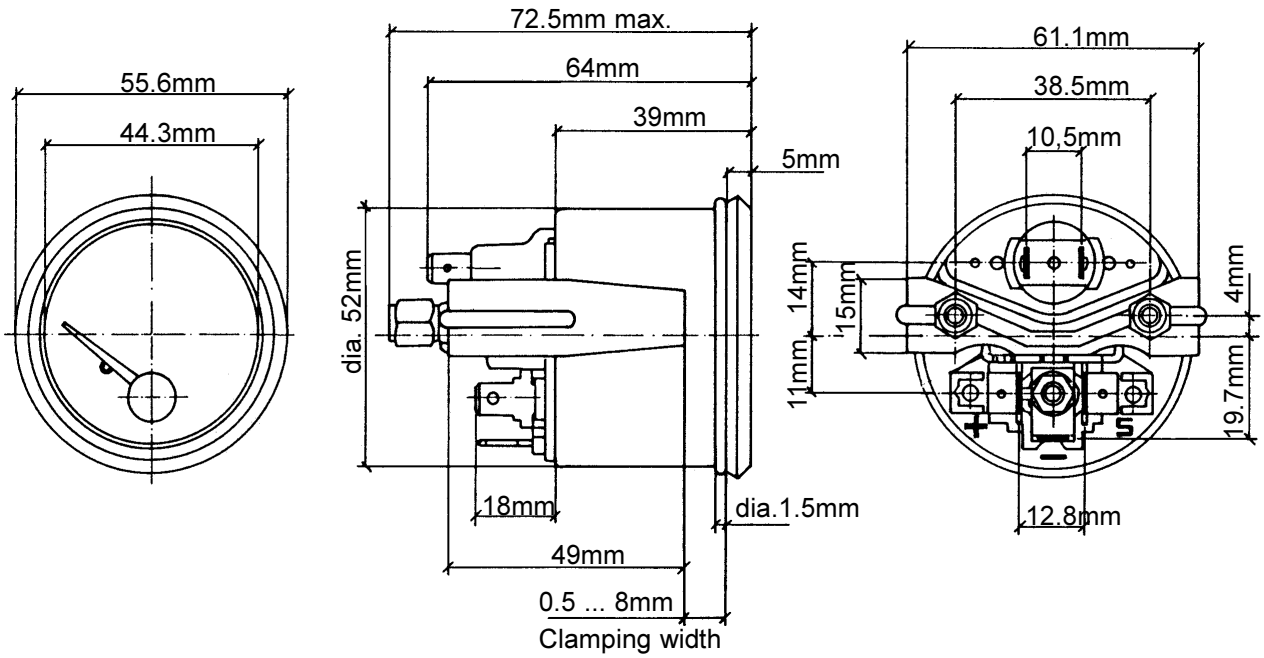

Pin assignment:

Pin +:	+ 12 V or + 24 V, terminal 15
Pin –:	Ground, terminal 31
Pin S:	Sensor

6. Electric Pressure Gauge (dia. 52 mm)

6.3 Pressure Sensors

The pressure sensors needed to operate the instrument is not included with the instrument.
The following pressure sensors (see data sheets for sensors) adapted to the instrument indicating range, can be used:

Negative earth	Insulated earth	Negative earth with warning contact
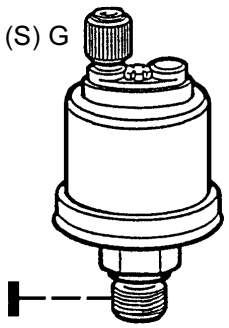	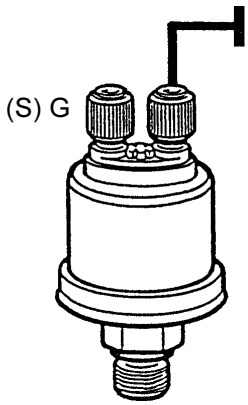	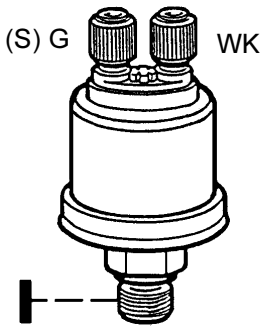 WK = Warning contact

The sensor is installed in the oil circuit at a position specified by the vehicle manufacturer (e.g. oil pressure switch). Use an adequate parts kit if a direct installation is not possible at this location.

To mount the pressure sensor it is absolutely only to use the hexagon nut.

If the connection thread is cylindrical, a sealing washer or a sealing ring made of copper must be fitted.

The values mentioned in the following table for the maximum tightening torque (Nm max.) refer exclusively to the load-bearing capacity of pressure sensors.

Prior to using the pressure sensor, it is important to ask the manufacturer of the vehicle, equipment system or engine in each instance for the maximum torque ? Nm max. value for the threaded hole into which the pressure sensor is to be screwed. Non-observance of the maximum thightening torque specified for the threaded hole in each instance can result in damage to the vehicle, engine or equipment system.

Thread	max.
M 10 x 1	30 Nm
1/8 in. BSPF	30 Nm
1/8 - 27 NPTF	30 Nm
R 1/8 DIN 2999	30 Nm
M12 x 1.5	40 Nm
M12 x 1	50 Nm
M14 x 1.5	60 Nm
1/4 in. BSPF	60 Nm
1/4 - 18 NPTF	60 Nm
3/8 - 18 NPTF	60 Nm
M 16 x 1.5	80 Nm
3/8 - 18 Dryseal NPTF	80 Nm
M 18 x 1.5	100 Nm

6. Electric Pressure Gauge (dia. 52 mm)

6.3 Pressure Sensors

Adaptor kits for oil pressure sensors

Adaptor kit with pressure hose

Kit includes: coupling, pressure hose (1000 mm long),adaptor, gsket and 2 screws.

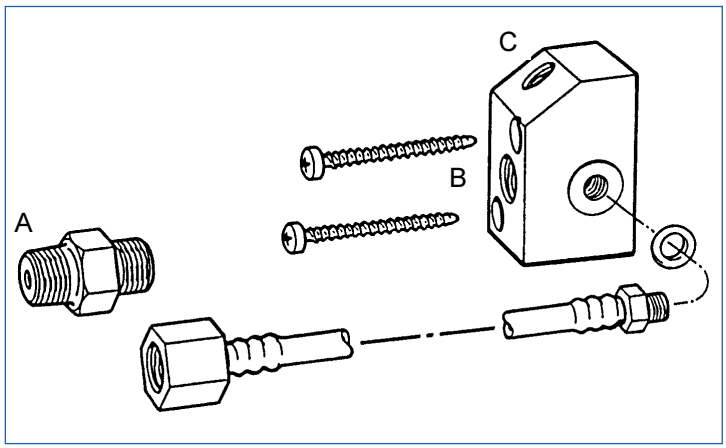

Part No.	Thread A	Thread B	Thread C
X11-360-004-023	M12 x 1.5 con.	M12 x 1.5	M10 x 1
X11-360-004-024	M14 x 1.5 con.	M14 x 1.5	M10 x 1
X11-360-004-025	14 - 18 PTF SEA SHORT	1/4 - 18 NPTF	M10 x 1
X11-360-004-026	R1/8 DIN 2999	R 1/8 DIN 2999	M10 x 1

Ask for the maximum torque (? Nm max.) from the engine manufacturer, equipment manufacturer or car manufacturer.

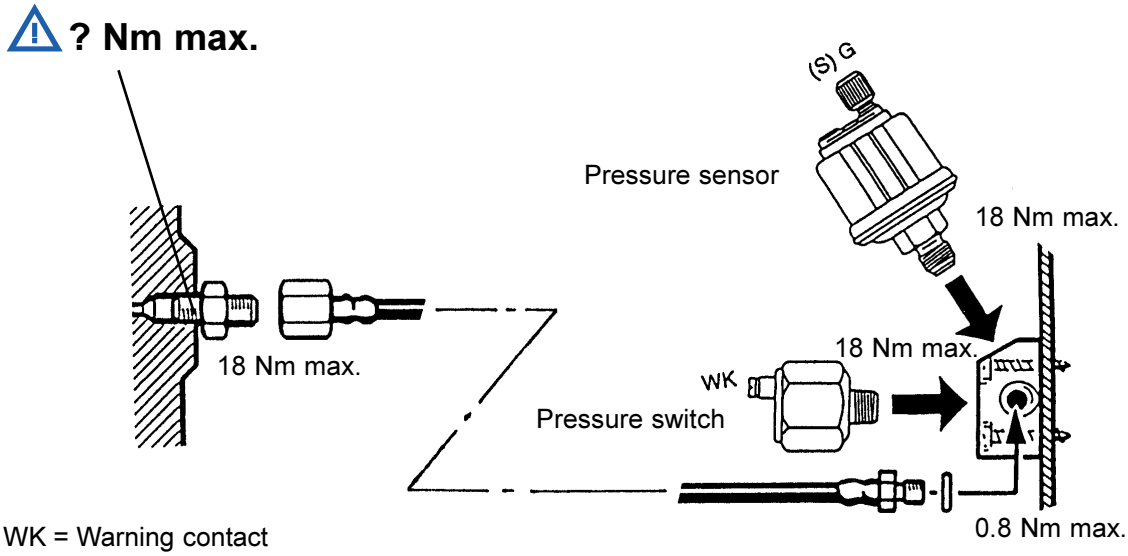

6. Electric Pressure Gauge (dia. 52 mm)

6.3 Pressure Sensors

Adaptor kits for oil pressure sensors

Adaptor kit with 2 connections

Kit includes: hollow screw, adaptor and 2 gaskets

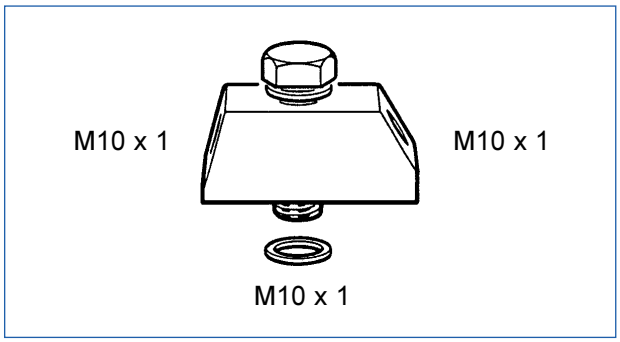

Part No. X11-360-004-020

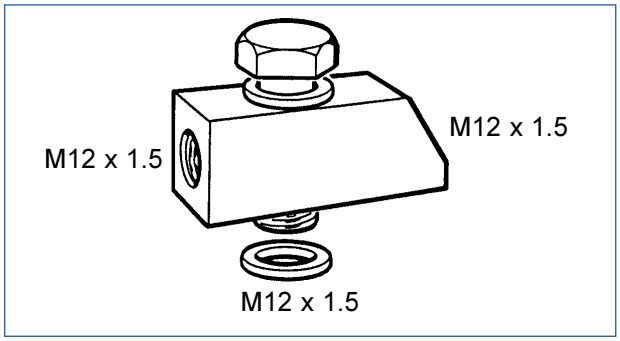

Part No. X11-360-004-021

Ask for the maximum torque (? Nm max.) from the engine manufacturer, equipment manufacturer or car manufacturer.

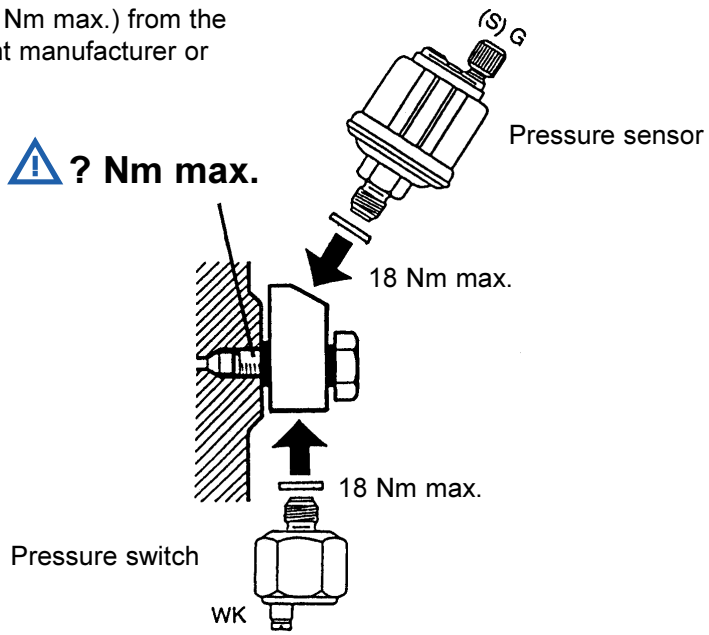

WK = Warning contact

6. Electric Pressure Gauge (dia. 52 mm)

6.3 Pressure Sensors

Adaptor kits for oil pressure sensors

Adaptor kit with 1 connection

Kit includes: hollow screw, adaptor and 2 gaskets

Part No. X11-360-004-005

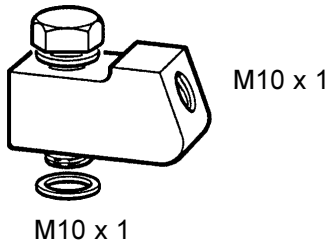

Part No. X11-360-004-027

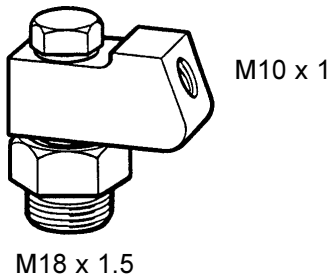

Ask for the maximum torque (? Nm max.) from the engine manufacturer, equipment manufacturer or car manufacturer.

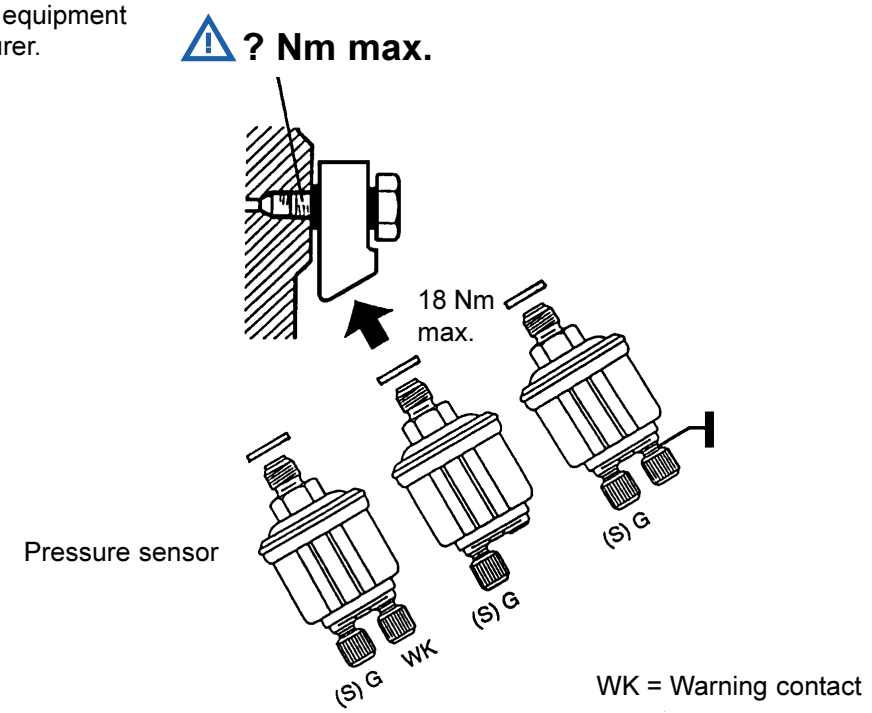

6. Electric Pressure Gauge (dia. 52 mm)

6.3 Pressure Sensors

Adaptor kits for oil pressure sensors

Coupling

Part No. X11-360-004-011	M10 x 1 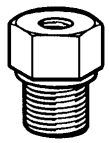 M16 x 1.5
Part No. X11-360-004-029	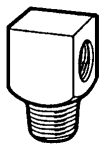 M12 x 1.5 M14 x 1.5 con.
Part No. X11-702-002-044	M10 x 1 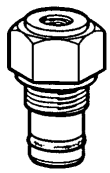 M18 x 1.5

Ask for the maximum torque (? Nm max.) from the engine manufacturer, equipment manufacturer or car manufacturer.

⚠ ? Nm max.

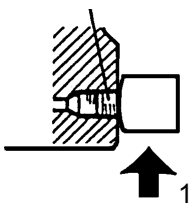

18 Nm max.

Pressure sensor

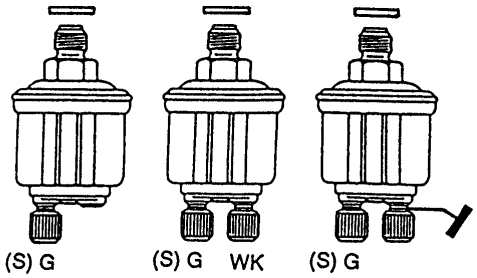

WK = Warning contact

6. Electric Pressure Gauge (dia. 52 mm)

6.3 Pressure Sensors

Adaptor kits for oil pressure sensors

Coupling (hollow screw)

Part No. X11-360-004-016

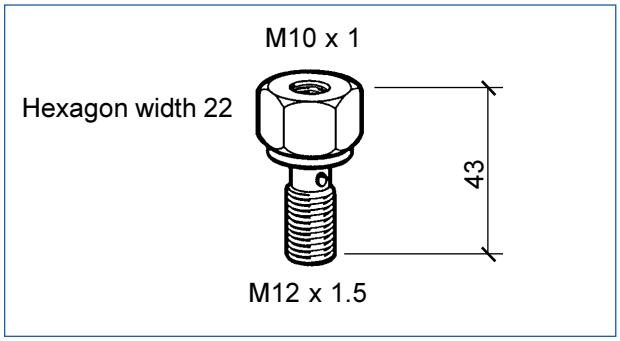

Part No. X11-360-004-019

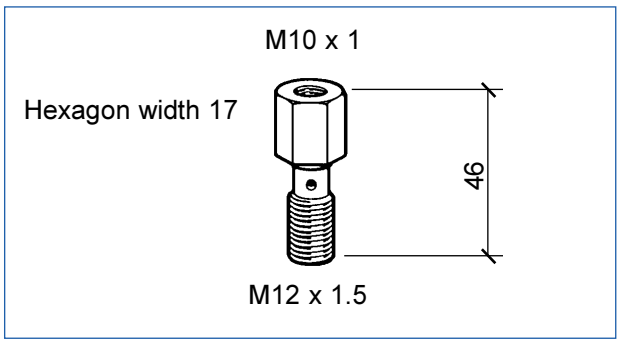

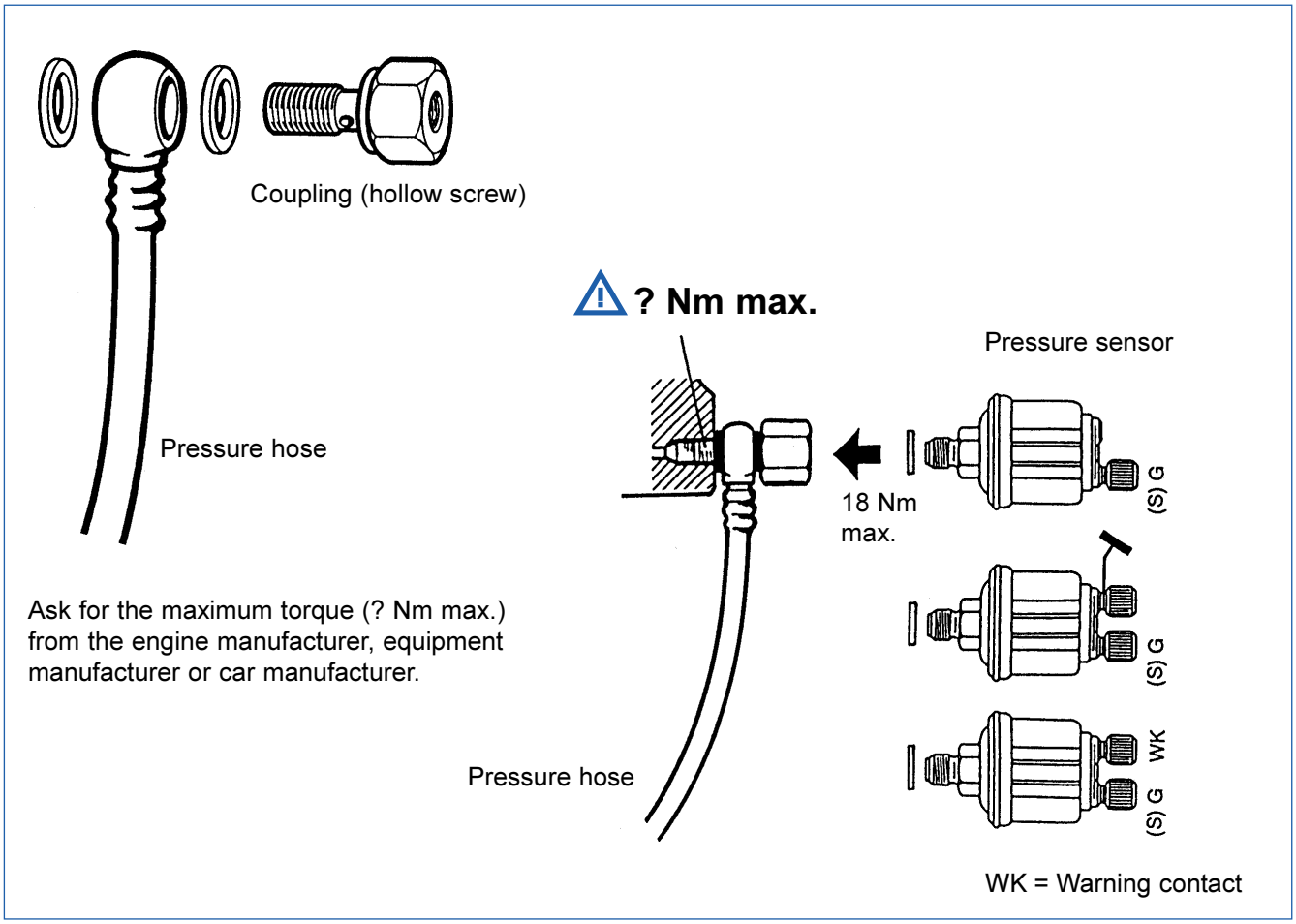

6. Electric Pressure Gauge (dia. 52 mm)

6.4 Wiring Diagrams

Pressure sensor:

negative earth
or
insulated earth

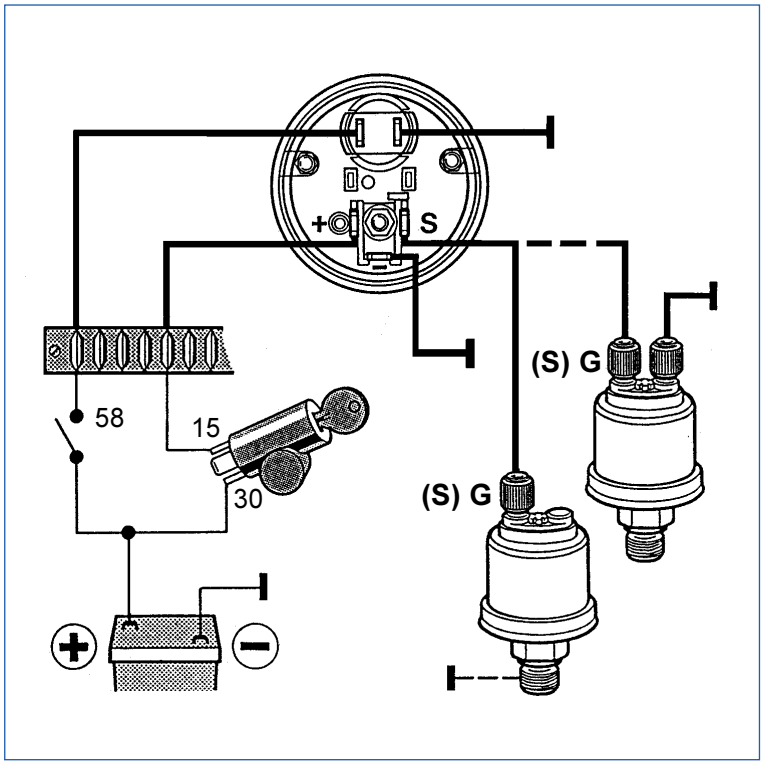

Pressure sensor with warning contact:

negative earth

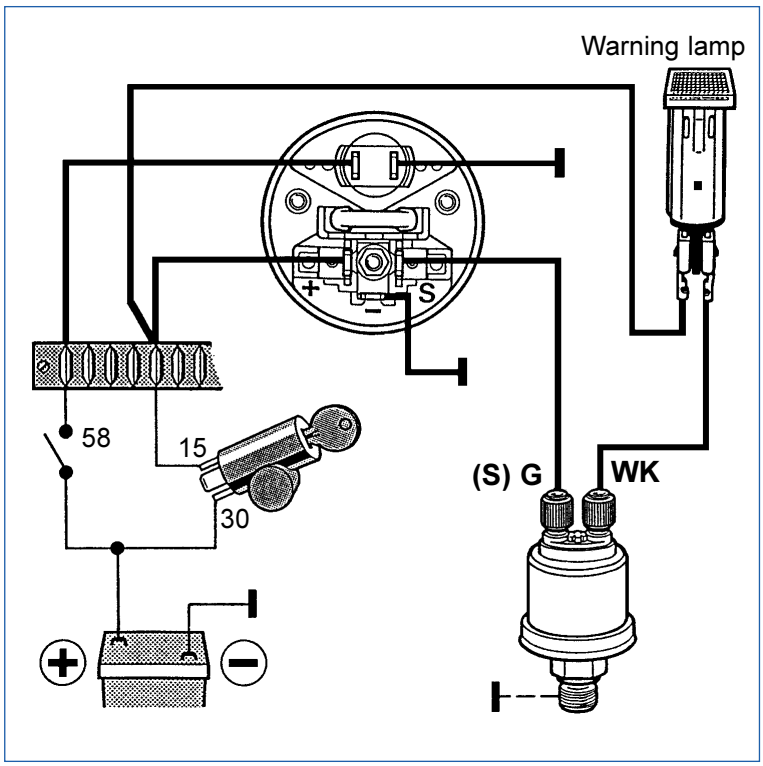

WK = Warning contact

6. Electric Pressure Gauge (dia. 52 mm)

6.5 Testing Instructions

Test accessories

1x Power supply
1x Test cable No. 3
1x Measuring cable
1x Resistor decade

} contained in test cables kit X12-019-101-001

Pin allocation

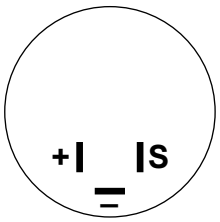

Pin + + 12V or + 24V
Pin – Ground
Pin S Sensor signal input

Test circuit diagram

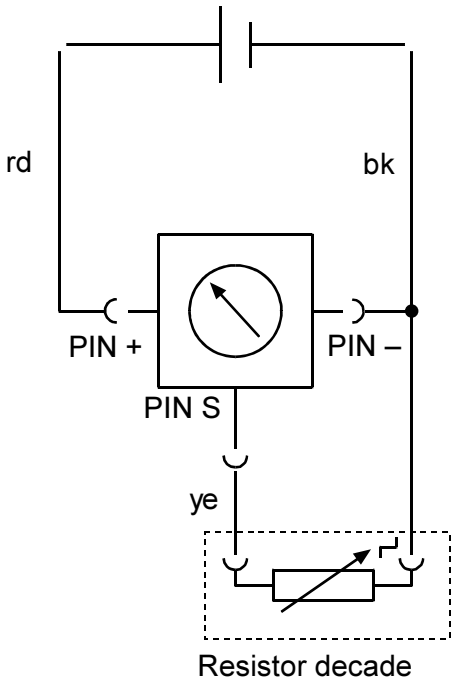

Test method description

Basic settings: 12 V instruments → 14 V
24 V instruments → 28 V

Start the pointer position test with the highest resistance value!

6. Electric Pressure Gauge (dia. 52 mm)

6.5 Testing Instructions

Test of the movement

Connect the instrument as shown in the test circuit diagram, using test cable 3.

The indication can be tested with the resistor decade ‘sensor simulator’.

The pointer moves to full scale deflection if the resistor decade is not connected.

The following tables shows the resistance values and the indication in angular degrees.

0 to 2 bar

Indication (bar)	0	1	2
Resistance (Ω)	10	99	184
Deflection (°∠)	0	41.4	87.4

0 to 5 bar

Indication (bar)	0	0.5	1	1.5	2	2.5	3	3.5	4	4.5	5
Resistance (Ω)	10	30	48	65	82	99	116	134	151	168	184
Deflection (°∠)	0	6.4	13.4	21.3	30.6	41.4	53	64.6	74.2	81.6	87.4

0 to 10 bar

Indication (bar)	0	1	2	3	4	5	6	7	8	9	10
Resistance (Ω)	10	31	52	71	88	106	124	140	155	170	184
Deflection (°∠)	0	6.8	15.2	24.4	34.3	46.2	58.3	68.2	76.1	82.4	87.4

0 to 25 bar

Indication (bar)	0	2.5	5	7.5	10	12.5	15	17.5	20	22.5	25
Resistance (Ω)	10	32	53	73	92	109.1	125	143	155	169	184
Deflection (°∠)	0	7.1	15.6	25.5	36.8	42.7	58.9	69.9	76.1	82	87.4

6. Electric Pressure Gauge (dia. 52 mm)

6.6 Instruments Survey

VDO cockpit vision (Backlight) dia. 52 mm **Part No. 350-010-. . .**

Dial		Special feature	Part No.
Range	Imprint		
0 … 5 bar	bar	Clamp ring 12 V	**008K**
0 … 5 bar	bar	Stud bolts 12 V	**014K**
0 … 10 bar	bar	Clamp ring 12 V	**007K**
0 … 10 bar	bar	Stud bolts 12 V	**015K**
0 … 150 PSI 0 … 10 bar	PSI, bar	Dual scale, clamp ring 12V without colour caps	**019C**

VDO cockpit vision (Backlight) dia. 52 mm **Part No. 350-020-. . .**

Dial		Special feature	Part No.
Range	Imprint		
0 … 10 bar	bar	Clamp ring 24 V without colour caps	**001C**

6. Electric Pressure Gauge (dia. 52 mm)

6.6 Instruments Survey

VDO cockpit international (Floodlight) dia. 52 mm **Part No. 350-030-. . .**

Dial		Special feature	Part No.
Range	Imprint		
0 … 5 bar	bar	12 V	**003C** **003G**
0 … 10 bar	bar	12 V	**004C** **004G**
0 … 25 bar	bar	12 V	**005C** **005G**
0 … 10 bar	bar	12 V	**011C** **011G**
0 … 5 x 100 kPa	kPa x 100	12 V	**016C**
0 … 10 x 100 kPa	kPa x 100	12 V	**017C**
0 … 80 psi 0 … 5 bar	psi, bar	12 V Dual scale	**020C**

VDO cockpit international (Floodlight) dia. 52 mm **Part No. 350-040-. . .**

Dial		Special feature	Part No.
Range	Imprint		
0 … 2 bar	bar	24 V	**001C**
0 … 5 bar	bar	24 V	**003C** **003G**
0 … 10 bar	bar	24 V	**004C** **004G**
0 … 25 bar	bar	24 V	**005C** **005G**
0 … 10 bar	bar	24 V	**011C** **011G**
0 … 5 x 100 kPa	kPa x 100	24 V	**016C**
0 … 10 x 100 kPa	kPa x 100	24 V	**017C**
0 … 80 psi 0 … 5 bar	psi, bar	24 V Dual scale	**020C**
0 … 10 bar 0 … 150 psi	bar, psi	24 V Dual scale	**015C**
0 … 400 psi 0 … 25 bar	psi, bar	24 V Dual scale	**029C** **029G**
0 … 5 bar	bar	24 V	**023C**